****Schematic is a representation of PCB Top Side****

Check www.signalblox.com for latest updates

Questions, problems, comments or concerns: w7bas@hcc.net

I.F. Attenuator Chart

Input Power	R5	R4a & R6a	R4b & R6b
0 - +10dbm	1 ohm	N/A	N/A
+11 - +20dbm	75 ohm	N/A	100 ohm
+21 - +30dbm	220 ohm	100 ohm	100 ohm
+31 - +33dbm	787 ohm	100 ohm	100 ohm

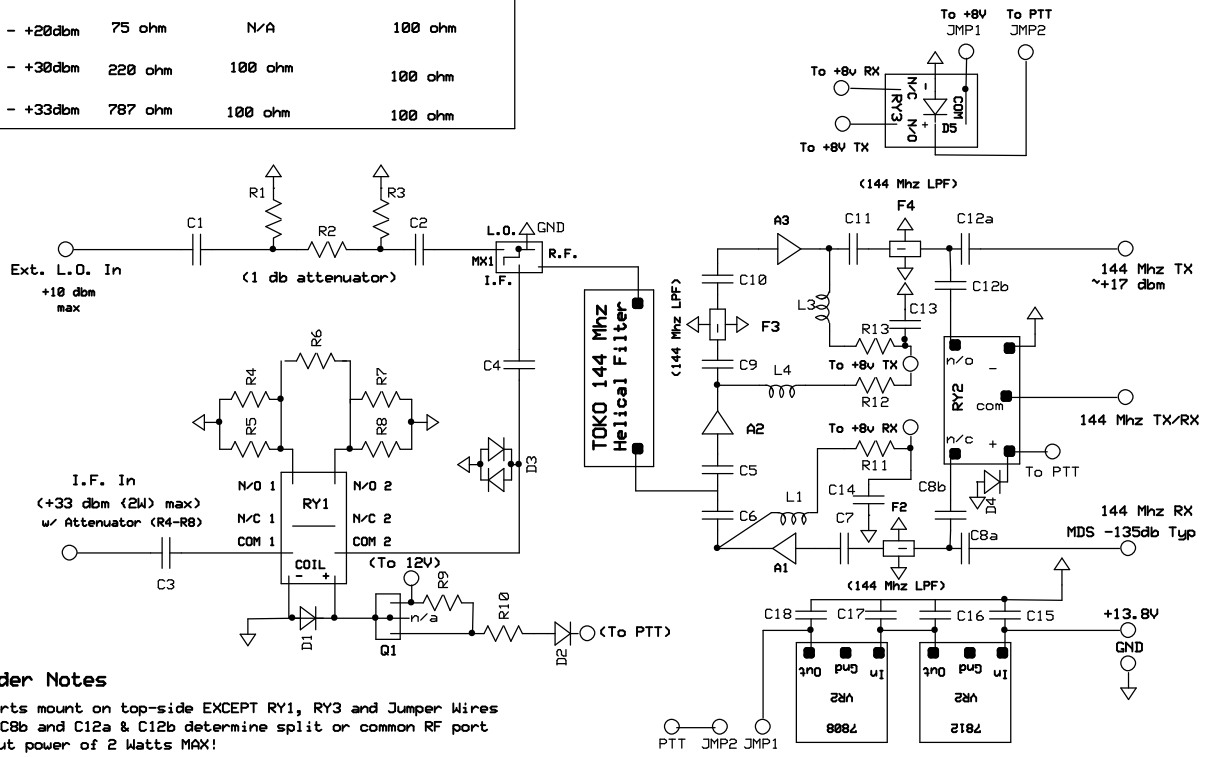

Builder Notes

All parts mount on top-side EXCEPT RY1, RY3 and Jumper Wires
C8a & C8b and C12a & C12b determine split or common RF port
IF input power of 2 Watts MAX!
Helical Filter is pre-tuned. GND well DO NOT OVERHEAT WHEN SOLDERING
MMIC's have a cut lead. This is the input.
LFCN filters have a ground on each side. GROUND WELL!
LFCN filters have a red line on bottom. Red line = input side. RED LINE MOUNTS DOWN
RX Current Draw = 80ma @ 13.8vdc
TX Current Draw = 250ma @ 13.8vdc
Install all top-side components first. Photos on www.signalblox.com for layout positions if needed.

W7BAS 144 Mhz Transverter

© W7BAS 2011

Rev 1.1
8/1/2011